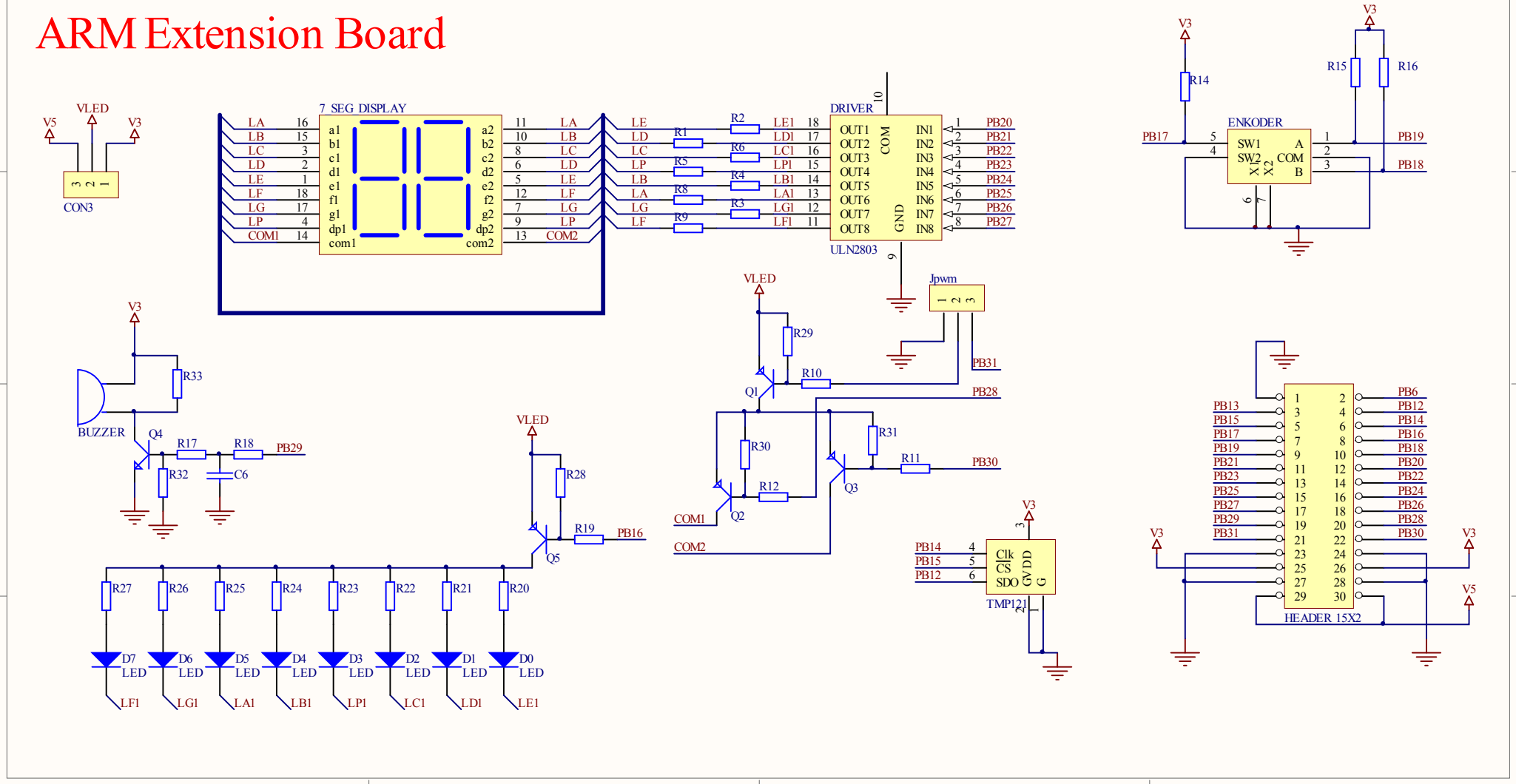ARM Extension Board